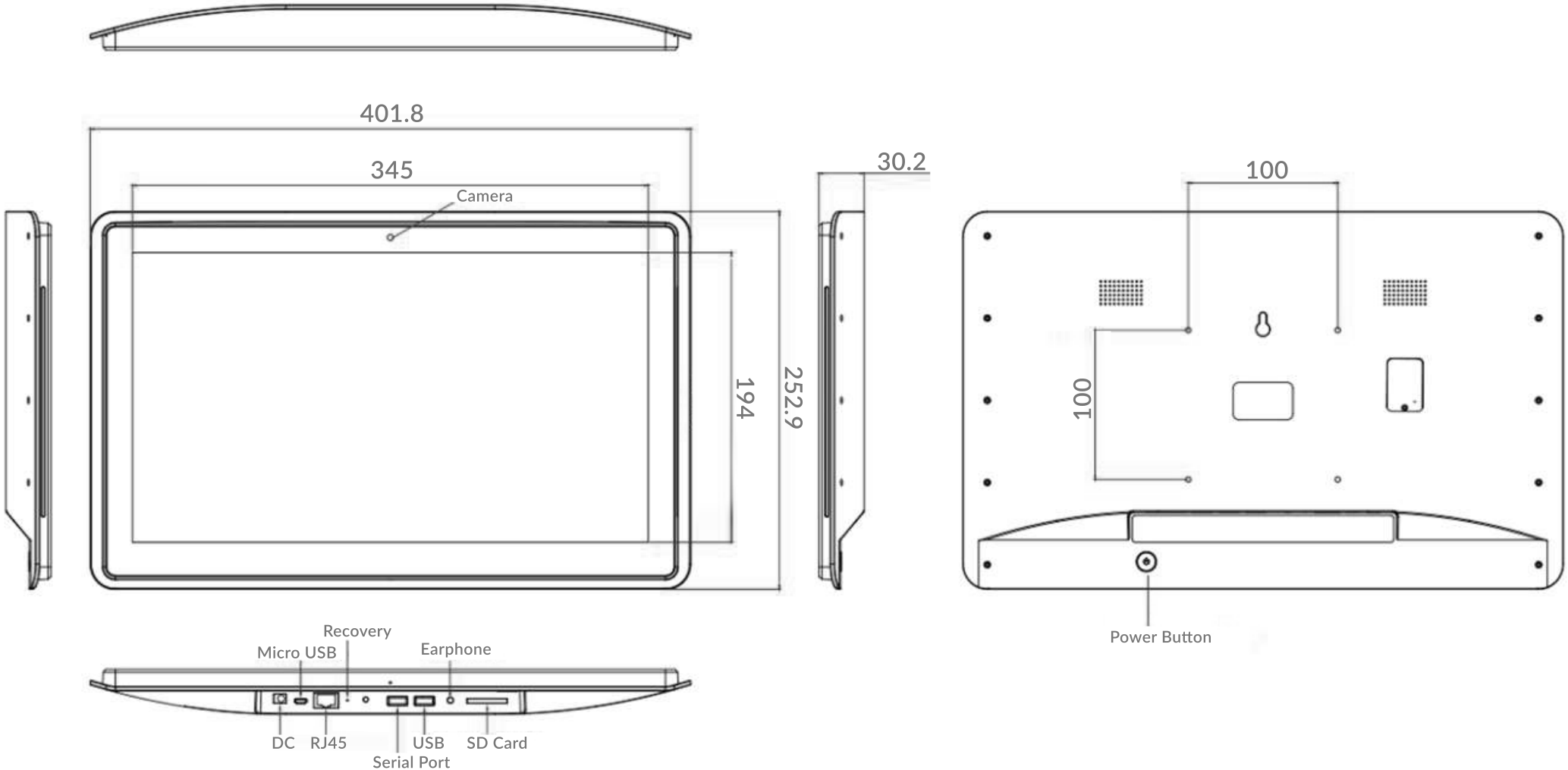
401.8
345
Camera
30.2
194
252.9
100
100
Power Button
Recovery
Micro USB
Earphone
DC
RJ45
USB
SD Card
Serial Port